Construction and Building Materials 94 (2015) 20–27

Contents lists available at ScienceDirect

Construction and Building Materials

journal homepage: www.elsevier.com/locate/conbuildmat

Repair of corroded and buckled short steel columns using concrete-filled GFRP jackets

A. Kaya, M. Dawood *, B. Gencturk

Department of Civil and Environmental Engineering, University of Houston, N107 Engineering Building 1, Houston, TX 77204-4003, United States

ARTICLE INFO

Article history:
Received 10 March 2015
Accepted 17 June 2015

Keywords:
Corroded steel columns
Rehabilitation and repair
Glass fiber reinforced polymers (GFRP)
Buckling
GFRP confined concrete

ABSTRACT

Many bridges and structures in the United States that are supported on steel columns or piles exhibit inadequate strength due to increasing load demand or aging due to corrosion, or both. The combination of increased load demand and reduction of capacity due to corrosion-induced section loss can lead to unexpected buckling of the piles. This paper investigates the effectiveness of a glass fiber reinforced polymer (GFRP)-based technique for rapid retrofit of buckled steel piles or columns. The system consists of a GFRP jacket, which is formed on-site and subsequently filled with an expansive concrete. Thirteen-buckled short steel columns with varying degrees of section loss were repaired and tested to failure under axial compression. The research results indicate that the repair system restored the capacity of the buckled columns to between 69% and 104% of the capacity of the undamaged control column. Further the repaired piles exhibited a hardening response in the non-linear range rather than the sudden loss of capacity and softening response that is characteristically associated with buckling of steel columns. The findings suggest that installation of concrete-filled GFRP jackets can be an effective technique to rapidly repair corroded and buckled short steel columns or piles.

1. Introduction

Steel piles and columns in bridges, marine structures, industrial facilities, and warehouses are particularly susceptible to corrosion. Failure of these critical load-bearing members could result in partial or total structural collapse that may require an urgent or emergency repair. Traditional repair techniques include welding or bolting steel plates, or casting large reinforced concrete jackets around the corroded section. The use of fiber reinforced polymer (FRP) composites instead of, or along with conventional construction materials is emerging as an alternative technique. In addition to being technically feasible, other claimed benefits of FRP-based systems include reduced cost, time, and labor associated with the installation. One common approach is to fabricate a cylindrical FRP shell, which is subsequently filled with a cementitious grout or concrete. The cementitious core, which may or may not be internally reinforced, stabilizes the steel element and the FRP shell provides confinement to the core. This intervention may be implemented along the entire length of a column or locally at the deteriorated segment.

The repair technique using FRP described above was investigated for strengthening of slender compression members of steel bridges by Liu et al. [14]. Various retrofit lengths were investigated to study the effect of the length of the repair on the capacity and overall response of the repaired steel columns. Seven 3 m long S4x9.5 steel compression members were tested. The flanges of the elements were machined to represent the section loss due to corrosion and subsequently repaired with concrete-filled GFRP tubes. The repaired members were tested monotonically and typically failed by global buckling that initiated just outside of the repaired region. The research findings indicate that in some cases the ultimate load carrying capacity of the repaired members was nearly twice that of the undamaged control member. The researchers further found that using expansive, lightweight concrete for the core material provided greater increases of strength than using non-expansive core materials due to the improved bond provided by the active confinement of the expansive core. A simplified design approach was also proposed in the same study to design the repair system.

El-Tawil and Ekiz [5] proposed a two-step technique to inhibit buckling of single- and double-angle brace members. Pre-fabricated mortar blocks were placed inside the root between the legs of the steel angles. The assembly was subsequently wrapped with different configurations of uniaxial wet lay-up CFRP. The retrofitted braces were subjected to reversed cyclic axial loads in a specially designed frame for testing steel braces. The retrofit system inhibited buckling of the braces up to inter-story drift

* Corresponding author.
E-mail address: mmdawood@uh.edu (M. Dawood).

http://dx.doi.org/10.1016/j.conbuildmat.2015.06.040
0950-0618/

levels of 2% and nearly doubled the cumulative energy dissipation of retrofitted braces compared to un-retrofitted braces at the same drift level. The system was more effective for double-angle braces than for single-angle braces.

Han et al. [8] investigated the cyclic performance of circular and square so-called double-skin tubular columns. These members consist of a circular steel inner tube and a circular or square bi-directional CFRP outer tube with a concrete core between the tubes. The columns were subjected to a constant axial load and a reversed-cyclic flexural load of increasing amplitude. Failure of the columns was characterized by the rupture of the longitudinal carbon fibers followed by rupture of the circumferential fibers. Post-failure evaluation of the columns revealed localized crushing of the concrete and inward buckling of the inner steel tubes. The test results indicated that increasing the axial load level of the columns increased their flexural ductility while increasing the number of layers of carbon fiber reinforced polymer (CFRP) in the outer tube increased the strength but reduced the flexural ductility of the columns.

In another study, 0.5 m long, W150 × 14 steel columns were retrofitted with GFRP along their entire length and tested in axial compression to failure [12]. Two different types of GFRP jackets which have different dimensions and material properties were evaluated and the use of a shrinkage reducing chemical admixture in the concrete core was investigated. Concrete mixes with similar compressive strength were used with and without a shrinkage reducing chemical admixture. The research suggested that shrinkage reduced the benefits of the confinement of the concrete core and resulted in a lower compressive strength. This was attributed to the formation of a gap between the concrete core and the FRP jacket. Installation of the proposed system increased the compressive strength of the members by between 40% and 80% with larger gains in strength being achieved by using the GFRP tube that has higher lateral tensile strength and modulus.

In another study, Karimi et al. [13] developed a new configuration of steel–concrete-FRP composite column. The voids between the flanges on either side of the web of a W150 × 14 steel column were filled with concrete. The composite element was subsequently wrapped with CFRP or GFRP. Columns ranging in length from 0.5 to 3.0 m were tested in axial compression. The compressive strength of the composite columns was between 2 and 5 times that of their bare steel counterparts. Similarly the elastic stiffnesses of the composite columns were between 2.1 and 2.5 times those of the bare steel control columns. Longer (more slender) columns generally exhibited greater increases of strength relative to shorter (stockier) columns while elastic strength increases were uncorrelated with length. All of the composite columns failed by global buckling.

Feng et al. [7] proposed a strengthening method for steel columns using mortar-filled pultruded GFRP tubes. Different steel section shapes were considered including I-shaped, cruciform, circular tubular, and square tubular sections. Additionally several layers of FRP fabrics were wrapped around the ends of the FRP tubes to prevent localized splitting of the tubes. The lengths of the tested columns varied from 0.78 to 2.9 m. Installation of this retrofit scheme increased the axial load carrying capacity and axial ductility of the tested members by up to 215% and 877%, respectively. The increase of capacity was larger for longer (more slender) columns which failed by global buckling while shorter columns generally exhibited a less dramatic strength increase after repair and they failed by localization of deformations outside of the repaired region.

Several other researchers have investigated the rehabilitation of steel compression members by directly bonding CFRP or GFRP materials to the steel member [4,9,15]. These studies generally demonstrated moderate increases of capacity for the strengthened members compared to plain steel control members. The greatest improvements were generally found when relatively stiff bi-directional CFRP materials were bonded to members with slender elements or when stiff CFRP plates were bonded to long, slender columns. In these cases the presence of the CFRP helped to postpone local buckling for the former and global buckling for the latter.

2. Research significance

Previous studies have focused on evaluating the behavior of new, undamaged columns that are retrofitted with FRP materials or those with simulated corrosion damage that are subsequently repaired with FRP. However, in practical applications, columns with severe corrosion may unexpectedly exhibit local or global buckling due to progress of corrosion between inspections or unintentional overload of the deteriorated member. In these applications, stabilization using concrete-filled FRP jackets may present an effective and rapidly deployable repair solution to maintain the integrity of the structure until a more permanent repair or replacement can be achieved. However, stabilization of buckled columns present unique challenges. Specifically, the buckled members exhibit large residual transverse deflections and reduced residual strength compared to their unbuckled counterparts. This can influence the effectiveness and ease of installation of the repair system. This paper presents the findings of an experimental program that was designed to evaluate the effectiveness of this technique to repair corroded and buckled steel short columns. This serves as a first step towards developing comprehensive design guidelines for the implementation of this repair technique.

3. Experimental program

A total of thirteen short steel columns were tested in this study. The columns consisted of W4 × 13 (US designation) columns with different patterns of simulated corrosion. The columns were previously tested to evaluate the capacity of short steel columns with localized severe corrosion [11]. After testing, the columns were repaired with different configurations of concrete-filled GFRP jackets to investigate the effectiveness of this repair technique. The configurations of the corrosion patterns are illustrated schematically in Fig. 1. In the previous study, the columns were assigned unique identifiers of up to five parts. The first two parts indicated the percentage reduction of flange and web thickness, respectively. The third part of the identifier, V or NV, indicated the presence or absence, respectively, of a 51 mm void at the mid-height of the web to simulate through web corrosion. The fourth part, S or US, indicated a symmetric or unsymmetric corrosion pattern, respectively, as illustrated in Fig. 1. The final part, WR if present, indicated the presence of a semi-circular reduction of the flanges to simulate the presence of flange perforations due to extreme corrosion.

In the current study, the columns that were previously tested by Karagah et al. [11] were put into four groups as summarized in Table 1. Specimens were grouped on the basis of similar simulated corrosion patterns, axial load–deflection response, failure modes, and residual loads at the conclusion of previous testing. Table 1 summarizes the residual load and the initial out-of-straightness of the tested piles prior to installation of the repairs. The residual load was obtained directly from the test data from the previous testing. The initial out-of-straightness was measured by placing the piles on a flat surface and measuring the maximum distance between the deformed columns and the surface. Additional details of the testing and observed behavior of the columns prior to repair are summarized elsewhere [11].

After the completion of the tests of the columns with simulated corrosion, the buckled columns were retrofitted with concrete-filled GFRP jackets. In addition to the grouping of the columns, the primary parameters that were considered in this study were the number of FRP layers in the jacket, and the details of

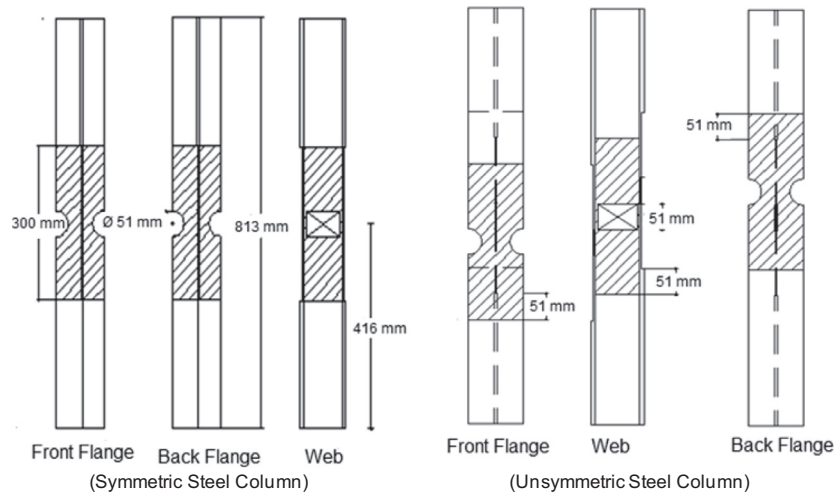

Fig. 1. Schematic representation of the corrosion patterns of the tested steel columns (adapted from [11]).

Table 1
Test matrix.

	Designation		Loss of cross section (%)	Initial out of straightness (mm)	Residual load of unrepaired columns (kN)	Retrofitting scheme	No of GFRP layers	Rebar	Compressive strength (kN)	
	Karagah et al. [11]	This Study							Unrepaired	Repaired
Group #1	0/0	G1/2/NR-1	0.0	15.1	809	Grout + GFRP	2	–	956	898
	0/30	G1/2/NR-2	9.0	7.9	769	Grout + GFRP	2	–	894	907
	0/60	G1/2/NR-3	16.1	11.1	408	Grout + GFRP	2	–	792	943
Group #2	50/0	G2/3/NR-1	39.9	11.1	408	Grout + GFRP	3	–	520	961
	50/30	G2/3/NR-2[a]	43.6	22.4	374	Grout + GFRP	3	–	578	874
Group #3	75/0	G3/2/4#3-1	58.9	6.4	325	Grout + GFRP + Rebar	2	4#3	409	912
	75/60	G3/2/4#3-2	67.6	4.0	205	Grout + GFRP + Rebar	2	4#3	311	731
	75/60/NV/US	G3/3/4#3	75.4	11.1	176	Grout + GFRP + Rebar	3	4#3	253	992
	75/60/NV/US/WR	G3/2/4#4	74.7	2.5	306	Grout + GFRP + Rebar	2	4#4	311	934
Group #4	75/60/V/S	G4/2/NR	78.8	4.0	67	Grout + GFRP	2	–	178	664
	75/60/V/S/WR	G4/2/4#4	88.3	3.2	64	Grout + GFRP + Rebar	2	4#4	160	298
	75/60/V/US	G4/3/NR	78.8	6.4	62	Grout + GFRP	3	–	178	840
	75/60/V/US/WR	G4/3/4#4	77.4	12.7	65	Grout + GFRP + Rebar	3	4#4	173	943

[a] Total length = 686 mm; repaired length = 521 mm.

the supplemental longitudinal steel reinforcement inside the concrete core as outlined in Table 1. To simplify the discussion, the retrofitted columns were each assigned new identifiers as listed in the test matrix (see Table 1). These identifiers consisted of four parts. The first part, G#, indicates the specific group number (1, 2, 3, or 4) of the tested column. The second part indicates the number of GFRP layers in the jacket (2 or 3). The third part indicates no internal reinforcement (NR) or the number and size of the internal longitudinal reinforcing bars (4#3 or 4#4). The size designations of the reinforcing bars (#3 and #4) follow the US designation and indicate the diameter of the bars in 1/8th inch (1 inch = 25.4 mm) increments. Therefore, #3 and #4 reinforcing bars have nominal diameters of 9.5 and 12.7 mm, respectively. The last part of the identifier (1, 2, or 3), if present, is a serial number to indicate multiple repetitions of the same test configuration. Due to the large uncertainty associated with testing buckled and repaired columns, multiple repetitions were conducted for several test configurations to evaluate the repeatability of the results.

4. Material properties

The following sections summarize the properties of the materials that were used in the fabrication of the test columns, including structural steel, concrete, reinforcing bars, and GFRP jackets.

4.1. Structural steel

Karagah et al. [11] reported the properties of the structural steel that were used for the tested columns. The tensile properties were obtained from two tensile coupons taken from the web and four coupons taken from the flanges of the tested section. One 406 mm long stub column was also tested to evaluate the compression properties and residual stresses of the steel. The stub column was loaded concentrically at a rate of 0.2 mm/inch. The top of the columns was pinned about both axes and the bottom was fixed against rotation about both axes. The stub column failed by global buckling. Table 2 summarizes the material properties of the steel.

4.2. GFRP jackets

Laminates were PileMedic PLG60.60

The GFRP jackets were produced using a commercially available, flexible, pre-cured, bidirectional GFRP laminate. This laminate is flexible enough to be wrapped into a multi-layered cylinder of the desired diameter. Five tension coupons were tested, according to [2] from each of the longitudinal (0°), transverse (90°) and (45°) directions of the laminate to determine the tensile properties. The laminates were oriented such that the longitudinal direction of the GFRP corresponded with the hoop direction of the jacket while the transverse direction of the GFRP corresponded with the axial

Table 2
Mechanical properties of steel columns [11].

Designation	Modulus of elasticity (GPa)	Yield strength (MPa)	Ultimate strength (MPa)	Strain at ultimate strength (mm/mm)
Stub column (compression)	208	369	N/A[a]	N/A[a]
Flange (tension)	186	387	478	0.133
Web (tension)	180	439	530	0.070

[a] Not applicable.

Table 3
Mechanical properties of the GFRP laminate.

Property	Longitudinal (0°)		Transverse (90°)	
	Mean	COV (%)[a]	Mean	COV (%)[a]
Tensile strength (MPa)	397	23	392	7
Tensile modulus (MPa)	21,918	15	18,416	10
Ultimate strain (%)	1.89	24	2.2	9
Poisson's ratio	0.28		0.26[b]	
Shear modulus (MPa)	1731			

[a] Coefficient of variation.
[b] Calculated as $\nu_{ij} = (E_i * \nu_{ji})/E_j$ based on symmetry of the material stiffness matrix [10].

Table 4
Properties of the adhesive (Quakewrap, N.D.).

Property	Value
Tensile strength (MPa)	30
Tensile modulus (MPa)	2268
Compressive strength (MPa)	55
Compressive modulus (MPa)	1923
Flexural strength (MPa)	55
Flexural modulus (MPa)	1725
Shear strength (MPa)	10

direction of the columns. Table 3 summarizes the mechanical properties of the GFRP laminate that were used in this study.

The GFRP laminate was wrapped into a multi-layer cylinder for the repair. Both surfaces of the GFRP were sanded, wiped clean, and coated with an epoxy-based adhesive to bond the laminate to itself to form the cylinder. Table 4 summarizes the properties of the adhesive, as reported by the manufacturer.

4.3. Concrete

The columns tested in this study were repaired in four batches. Therefore, four distinct batches of concrete were produced, each with slightly different properties. Table 5 summarizes the target proportions of the concrete mixture. To ensure intimate contact between the concrete, the FRP jacket, and the steel column, a commercially available expansive cementitious material was used in the preparation of the concrete [6]. The compressive strength of the concrete was determined by testing 102 mm diameter × 203 mm long concrete cylinders according to [3] immediately before and after testing of the repaired columns from the same batch of concrete. For all four batches, the compressive strength was found to remain approximately constant after 14 days of curing. Table 5 summarizes the mean and the coefficient of variation (COV) of the compressive strengths for the four different batches of the concrete.

4.4. Reinforcing bars

The tensile properties of the reinforcing bars were obtained by testing representative samples according to ASTM A370 [1]. Two samples were tested for each reinforcing bar diameter. Table 6 summarizes the mechanical properties of the reinforcing bars. The tensile modulus was obtained by fitting a best-fit line to the linear portion of the stress–strain curve between stress levels of 34.5 and 276 MPa. The yield strength was obtained by the 0.2% offset method. The ultimate strength was determined directly from load measurement and the nominal cross-sectional areas of the #3 and #4 reinforcing bars.

5. Specimen fabrication

The GFRP jackets that were used in this study were fabricated from a continuous flexible GFRP laminate that was wrapped around the pile and bonded to itself to produce a multi-layered closed, circular GFRP tube around the pile. The benefit of this system is that the GFRP tube can be manufactured on site to any length, diameter, and thickness desired to meet the demands of the specific repair application at hand. The repair procedure included nine steps: (1) the steel surface was cleaned using a wire brush and alcohol; (2) the GFRP sheets were cut to the appropriate dimensions; (3) wooden spacers were placed on the flanges of the steel columns to prevent direct contact between the steel columns and the GFRP jackets; (4) the GFRP jackets were wrapped around the steel columns to a nominal diameter of 203 mm; (5) the two-component epoxy was mixed for 3 min using a low speed mixer until achieving a uniform color; (6) the epoxy was applied to both sides of the GFRP laminate prior to wrapping the laminate around the column; (7) the jacket was secured using plastic zip ties for 48 h while the epoxy cured; (8) the reinforcing bars were placed inside the jackets (depending on the specimen); and (9) the grout and gravel were mixed using a gravity-based mixer and cast into the FRP jackets. Fig. 2 shows a schematic representation of the repaired columns.

6. Test setup and instrumentation

The specimens were tested under monotonic compression load using a 1780 kN capacity Tinius-Olsen universal testing machine.

Table 5
Proportions of the concrete mixture and cylinder test results.

Casting group	Mixture by weight ratio			Designation of columns	Age of concrete at testing of cylinders (days)[a]	Number of cylinders tested	Compressive strength	
	Grout	Gravel	Water				Mean (MPa)	COV (%)[b]
Group #1	1.0	0.5	0.17	G1/2/NR-1, G1/2/NR-2, G2/3/NR-1, G2/3/NR-2	14–18	9	51	4
Group #2	1.0	0.5	0.15	G1/2/NR-3, G3/2/4#3-1, G4/2/NR	24–29	5	63	3
Group #3	1.0	0.5	0.15	G3/2/4#3-2, G3/3/4#3, G3/2/4#4	98–119	5	71	3
Group #4	1.0	0.5	0.15	G4/2/4#4, G4/3/NR, G4/3/4#4	18–28	4	59	2

[a] Cylinders were tested at the start and end of the column tests for each group.
[b] Coefficient of variation.

Table 6
Mechanical properties of the reinforcing bars.

Property	Rebar #3 Mean	Rebar #4 Mean
Modulus of Elasticity (GPa)	198	204
Yield Strength (MPa)	437	399
Ultimate Strength (MPa)	607	668

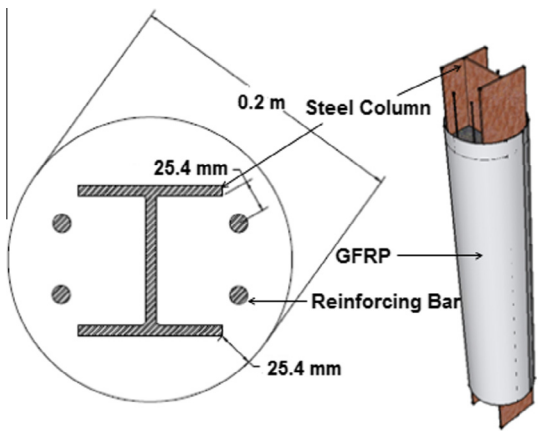

Fig. 2. Schematic representation of repaired steel columns.

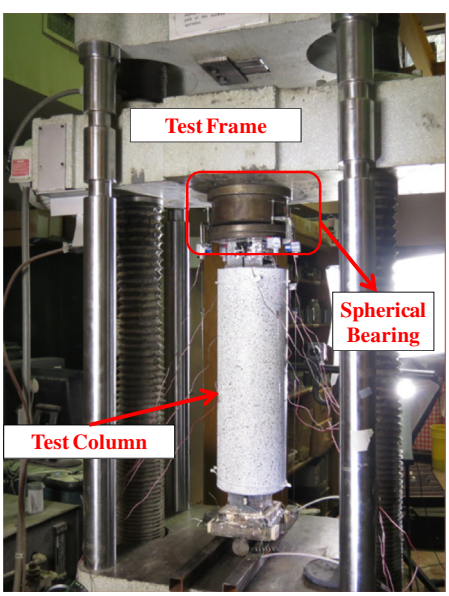

Fig. 3. Test setup.

The boundary conditions of the columns were designed to provide a nominally simply-supported condition about the weak axis of the column and a nominally fixed/pinned condition about the strong axis. A thin layer of plaster was applied at the end caps to fill the gap between the specimen and the support plate. Fig. 3 shows the test setup. Four string potentiometers were placed at the four corners of each specimen to measure the axial shortening. The string potentiometers were installed in such a manner so as to measure the vertical displacement between the two end caps. Data was collected using a Micro-Measurements System 7000 data acquisition system.

7. Results and discussion

As mentioned previously, the columns that were tested in this study were grouped into four groups based on the behavior of the corroded columns prior to strengthening. The following sections summarize the behavior of the repaired columns in each of the four tested groups. Fig. 4(a–d) presents the axial load–deflection response of the columns in groups #1 – #4, respectively. The figures present the response both prior to and after repair for all of the tested columns. Table 7 summarizes the measured peak load and axial stiffness of the tested columns, prior to and after repair. The following sections summarize the observed behavior of the tested columns in each group and discuss the influence of the key test parameters.

7.1. Behavior of columns in group #1

Group #1 included three columns, all which had reductions of the web thickness between 0% and 60% and no reduction of the flange thickness. Prior to repair, the columns in group #1 all failed by global buckling at load levels varying from 792 to 956 kN. After reaching their peak loads, loading of the columns continued until the load decreased to levels between 408 and 809 kN. This group of columns had the least reduction of the cross-sectional area and the largest residual capacity among the tested columns.

Fig. 4(a) shows the axial load-shortening behavior of all three of the tested columns before and after repair. All three columns were repaired with a two-layer GFRP jacket and no internal rebar. The repaired columns all failed by global buckling accompanied by splitting of the GFRP near the ends of the jackets with localized cracks forming in the grout near the flange tips as illustrated in Fig. 5(a). The repair system was capable of restoring the capacities of the columns to between 94% and 99% of the capacity of the undamaged, uncorroded control column, 0/0. However, the elastic axial stiffnesses of the piles were only between 54% and 67% of the undamaged control column. This was attributed to the increased initial out-of-straightness of the buckled columns. Inspection of the axial load–deformation response of the repaired columns in Fig. 4(a) indicates that all three columns exhibited a similar response suggesting a high degree of repeatability of the results.

7.2. Behavior of columns in group #2

Group #2 included two columns with 50% reduction of the flange thickness and 0% or 30% reduction of the web thickness. Prior to repair, these columns failed by flange local buckling which, for the column with 30% web thickness reduction, was accompanied by localized web distortion. The failures occurred at loads between 520 and 578 kN. After reaching their peak loads, loading of the columns continued until the load decreased to levels between 374 and 408 kN. Both of the columns were repaired with a three-layer GFRP jacket and no internal reinforcing.

Fig. 4(b) shows the axial load-shortening behavior of the group #2 columns before and after repair. The figure also shows the axial load-shortening behavior of the 0/0 control column for comparison purposes. Both of the repaired columns failed by global buckling accompanied by vertical splitting of the GFRP near the ends of the jackets and localized cracking of the grout. The observed failure was similar to that of the columns in group #1 as shown in Fig. 5(a). Inspection of Table 7 indicates that the repair was capable of restoring the capacities of the buckled columns to between 91% and 100% of the capacity of the undamaged, uncorroded control column. Further, the capacities of the repaired columns were between 51% and 84% higher than the capacities of the corroded columns prior to installation of the repair. However, the axial

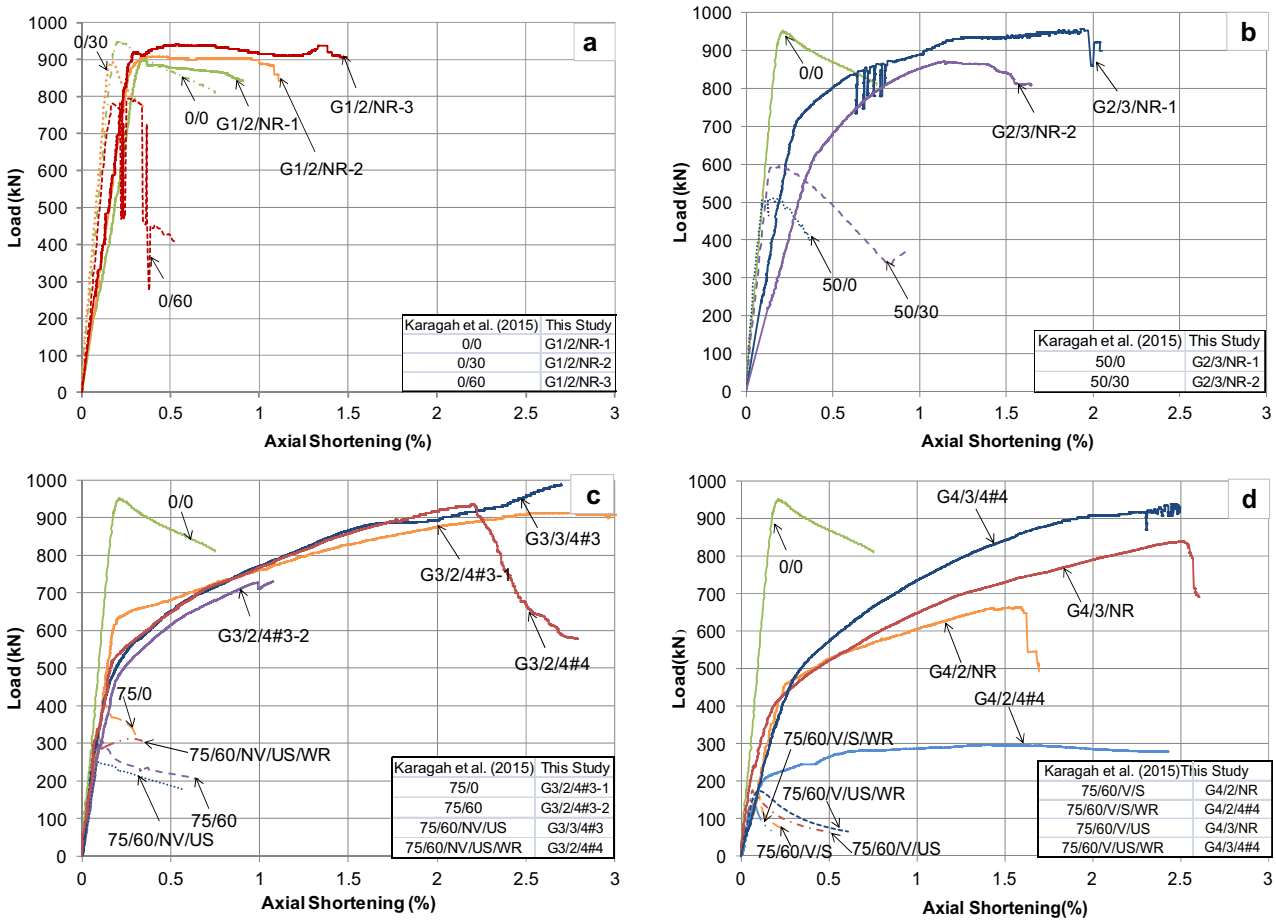

Fig. 4. Axial load-shortening behavior of the columns (a) group #1, (b) group #2, (c) group #3 and (d) group #4.

Table 7
Test results.

	Designation	Initial out of straightness (mm)	Peak axial load (kN)				Axial stiffness (kN/mm)			Failure mode
			Unrepaired, P_{un}	Repaired, P_r	P_r/P_{un}	P_r/P_0^*	Unrepaired, K_{un}	Repaired, K_r	K_r/K_{un}	
Group #1	G1/2/NR-1	15.1	956	898	0.940	0.940	619	336	0.543	Global buckling/rupture
	G1/2/NR-2	7.9	894	907	1.015	0.949	731	408	0.558	Global buckling/rupture
	G1/2/NR-3	11.1	792	943	1.191	0.986	622	416	0.669	Global buckling/rupture
Group #2	G2/3/NR-1	11.1	520	961	1.846	1.005	655	322	0.492	Global buckling/rupture
	G2/3/NR-2	22.4	578	874	1.512	0.914	633	236	0.373	Global buckling/rupture
Group #3	G3/2/4#3-1	6.4	409	912	2.228	0.953	421	430	1.020	Rupture
	G3/2/4#3-2	4.0	311	731	2.349	0.765	366	369	1.009	Debonding
	G3/3/4#3	11.1	254	992	3.912	1.037	359	408	1.134	Global buckling
	G3/2/4#4	2.5	311	934	3.000	0.977	410	354	0.865	Rupture
Group #4	G4/2/NR	4.0	173	664	3.826	0.694	240	235	0.980	Rupture
	G4/2/4#4	3.2	160	298	1.861	0.312	339	232	0.684	Grout fracture at void
	G4/3/NR	6.4	178	840	4.723	0.879	338	267	0.788	Rupture
	G4/3/4#4	12.7	173	943	5.436	0.986	286	208	0.727	Global buckling

P_0^* Peak axial load of undamaged, uncorroded control column.

stiffnesses of the repaired columns were between 38% and 52% of that of the control column which was again attributed to the high initial out-of-straightness of the buckled columns.

7.3. Behavior of columns in group #3

Group #3 included four columns with 75% reduction of the flange thickness and 0% or 60% reduction of the web thickness. Prior to repair the columns all failed by flange local buckling which, in the case of columns with a 60% reduction of the web thickness, was accompanied by localized distortion of the web. The failure loads were between 253 and 409 kN. After reaching their peak loads, loading of the columns continued until the load decreased to levels between 176 and 325 kN.

Fig. 4(c) shows the axial load-shortening behavior of the group #3 columns before and after repair. The figure also presents the axial load-shortening behavior of the 0/0 control column for comparison purposes. Due to the extensive section loss and reduction of capacity of these columns, extra measures were implemented to increase the effectiveness of the repair system. Columns

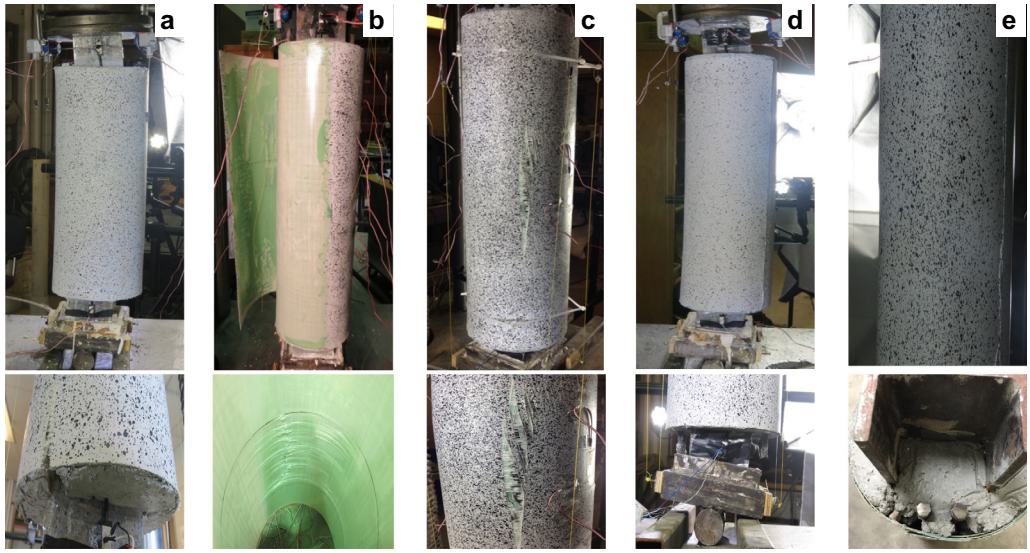

Fig. 5. Failure of test columns (a) G2/3/NR-2 (b) G3/2/4#3-2 (c) G3/2/4#4 (d) G3/3/4#3 (e) G4/2/4#4.

G3/2/4#3-1 and G3/2/4#3-2 were both repaired with two-layer GFRP jackets and four 9.5 mm diameter steel internal reinforcing bars. Column G3/2/4#3-1 failed by global buckling and rupture of the GFRP, as illustrated in Fig. 5(c), at a load level of 912 kN, which corresponded to 95% of the capacity of the uncorroded control column. Column G3/2/4#3-2 was the only column for which the surface of the GFRP jacket was only sanded on one side prior to installation. Consequently, the column failed by delamination of the GFRP jacket, as shown in Fig. 5(b). Delamination initiated at the free end of the GFRP at a load level of 730 kN. This load level corresponded to the 76% of the capacity of the uncorroded control column. The failure of this column highlights the importance of proper surface preparation and bonding of the jacket prior to installation.

Column G3/2/4#4 was similar to the previous two columns, but included 12.7 mm diameter internal steel reinforcing bars rather than 9.5 mm diameter bars. The repaired column failed due to GFRP rupture as shown in Fig. 5(c) at a load level of 934 kN, which corresponded to 98% of the capacity of the control column.

Column G3/3/4#3 was repaired with a three-layer GFRP jacket rather than a two-layer jacket like the previous columns. It failed due to global buckling of the column without rupture of jacket as shown in Fig. 5(d) at a load level of 992 kN, which corresponded to 104% of the capacity of the control column. Testing was halted when excessive rotation was observed at the upper and lower supports. Comparison of the behavior to that of column G3/2/4#3-1 indicates that increasing the jacket thickness helped to increase the failure load by 9%. Further, increasing the jacket thickness prevented rupture of the jacket at failure.

7.4. Behavior of columns in group #4

Group #4 included four columns with a 75% reduction of the flange thickness, 60% reduction of the web thickness, and a void in the web to simulate through-corrosion. Prior to repair the columns all failed by localized buckling of the flanges on either side of the web void at loads between 160 and 178 kN. After reaching their peak loads, loading of the columns continued until the load decreased to levels between 62 and 67 kN.

Fig. 4(d) shows the axial load-shortening behavior of the group #4 columns before and after repair along with the behavior of the 0/0 control column for comparison purposes. Columns G4/2/NR and G4/3/NR were similar except that they were repaired with two-layer and three-layer GFRP jackets, respectively. Comparison of the results indicates that both columns exhibited a similar trend of behavior. Both columns failed by rupture of the GFRP jacket as illustrated in Fig. 5(c) at loads of 664 and 841 kN, respectively. The results indicate that increasing the number of layers in the GFRP jacket increased the capacity of the repaired column by 25%. This increase of capacity was achieved despite the fact that the initial out-of-straightness of column G4/3/NR was 1.5 times that of column G4/2/NR.

Column G4/3/4#4 failed by global buckling, as illustrated in Fig. 5(d), at a measured load of 943 kN. The test was stopped when excessive rotations were observed at the upper and lower supports. Inspection of Fig. 4(d) indicates that the axial load-shortening response had achieved a plateau at this stage. Comparing the results of columns G4/3/NR and G4/3/4#4 indicates that the presence of the additional reinforcing bars helped to increase the capacity of the repaired columns by 12% despite the fact that the initial out-of-straightness of column G4/3/4#4 was twice that of column G4/3/NR.

During the repair of column G4/2/4#4, the concrete began to set prior to completely filling the FRP jacket. Consequently, there were substantial air voids in the grout within the GFRP jacket. Despite this documented short-coming during the repair process, the column was tested to evaluate the influence of incomplete filling on the performance of the repaired column. Inspection of Fig. 4(d) indicates that the column exhibited a much lower capacity than the other three repaired columns in the same group. However, the column did exhibit a significant plastic plateau despite being incompletely filled with concrete. The repaired column achieved a peak load of 298 kN which is 86% larger than the capacity of the column prior to repair but only 31% of the capacity of the uncorroded control column. Thus, if the primary objective of a given repair application is to stabilize a column and prevent possible collapse due to instability of the column, the results suggest that this objective may be achievable even if the concrete core is not properly consolidated. However, in order to maximize the potential benefit of the repair system, the concrete should be completely filled and properly consolidated within the jacket.

8. Summary and conclusion

Thirteen buckled short steel columns with simulated corrosion damage were repaired using concrete-filled GFRP jackets. The columns were subsequently tested under monotonic compression to

evaluate the effectiveness of the repair system for rapid, emergency repair of buckled steel columns and bridge piles with different levels of corrosion. The effect of different parameters on the response of the repaired columns, including the effect of the number of layers of the GFRP jacket and the presence and diameter of internal longitudinal steel reinforcing bars were studied. The load carrying capacity and the axial load-shortening response of the repaired columns were compared to those of the corroded columns (prior to repair) and an uncorroded control column. The research findings lead to the following conclusions:

- When correctly installed, the repair system restored the capacity of the buckled columns to between 69% and 104% of the capacity of the uncorroded control column. For nine of the tested columns, installation of the repair system increased the capacity of the buckled columns to at least 90% of the capacity of the undamaged control column. For the columns with the most severe corrosion (when the repair system was correctly installed) the capacity of the repaired columns was between 3.8 and 5.4 times the capacity of the same columns prior to repair. Properly repaired columns typically failed by global buckling with or without rupture of the GFRP jacket.
- The repaired columns all exhibited a hardening response in the non-linear range with increasing load after the onset of non-linearity, while the corroded but unrepaired columns typically exhibited a softening response with a decreasing post peak load. The hardening response is preferable to facilitate load redistribution and overall system stability.
- Increasing the number of GFRP layers in the jacket increased the axial load capacity of the repaired columns. When similar specimens were compared, with two and three layers of GFRP the axial load capacity increased by between 9% and 26%. The increase was more significant for columns that did not have any internal reinforcing bars in the repair system.
- Adding internal reinforcing bars also helped to increase the capacity of the repaired columns by 12%. Columns with four 12.7 mm reinforcing bars exhibited comparable responses and capacities to similar columns with four 9.5 mm reinforcing bars. Thus, the diameter of the reinforcing bars appears to play only a secondary role.
- The effectiveness of the repair technique is sensitive to construction and installation quality. Specifically, the presence of air voids in the concrete due to incomplete filling of the jacket resulted in a reduced improvement of the axial capacity of the repaired columns. Similarly, incomplete sanding of the GFRP jacket resulted in an inadequate bond between the GFRP layers causing premature debonding and a reduced capacity of the repaired columns.

The research findings indicate that the use of concrete-filled GFRP jackets is a promising technique for emergency repair and stabilization of steel columns and piles that exhibit severe localized corrosion and that have subsequently buckled. While the results are promising, a rigorous procedure for the design of the repair system needs to be developed to facilitate implementation of this technique by engineers and practitioners.

Acknowledgments

The authors acknowledge the in-kind support provided by QuakeWrap Inc. The authors also thank Mr. Hossein Karagah for his assistance with the research. Additionally, the first author acknowledges the generous financial support provided by Republic of Turkey, Ministry of National Education.

References

[1] ASTM International. A370-12a, Standard Test Methods and Definitions for Mechanical Testing of Steel Products, West Conshohocken, PA, 2012.
[2] ASTM International. D7565M-10 Standard Test Methods for Determining Tensile Properties of Fiber Reinforced Polymer Matrix Composites Used for Strengthening of Civil Structures, West Conshohocken, PA, 2010.
[3] ASTM International. C39/C39M-14a Standard Test Method for Compressive Strength of Cylindrical Concrete Specimens, West Conshohocken, PA, 2014.
[4] M.R. Bambach, H.H. Jama, M. Elchalakani, Axial capacity and design of thin-walled steel SHS strengthened with CFRP, Thin Walled Struct. 47 (2009) (2009) 1112–1121.
[5] S. El- Tawil, E. Ekiz, Inhibiting steel brace buckling using carbon fiber-reinforced polymers: large-scale test, J. Struct. Eng. 135 (5) (2009) 530–538.
[6] Euclid Chemical Company. (n.d.). Euco Pre-Cast Grout Non-Shrink, Non-Metallic Grout. Retrieved from: <http://euclidchemical.com/fileshare/ProductFiles/TechData/Euco_Pre_Cast_Grout.pdf> on September 19, 2014.
[7] P. Feng, Y. Zhang, Y. Bai, L. Ye, Strengthening of steel members in compression by mortar filled FRP tubes, Thin Walled Struct. 64 (2013) 1–12.
[8] L. Han, Z. Tao, F. Liao, Y. Xu, Tests on cyclic performance of FRP-concrete-steel double-skin tubular columns, Thin Walled Struct. 48 (2010) 430–439.
[9] K.A. Harries, A.J. Peck, E.J. Abraham, Enhancing stability of structural steel sections using FRP, Thin Walled Struct. 47 (2009) 1092–1101.
[10] R. Jones, Mechanics of Composite Materials, second ed., Taylor Francis Inc., Philadelphia, PA, 1999.
[11] H. Karagah, C. Shi, M. Dawood, A. Belarbi, Experimental investigation of short steel columns with localized corrosion, Thin Walled Struct. 87 (2015) 191–199.
[12] K. Karimi, M.J. Tait, W.W. El-Dakhakhni, Testing and modeling of a novel FRP-encased steel-concrete composite column, Compos. Struct. 93 (2010) 1463–1473.
[13] K. Karimi, W.W. El-Dakhakhni, M.J. Tait, Behavior of slender steel–concrete composite columns wrapped with FRP jackets, J. Perform. Constr. Fac. 26 (5) (2012) 590–599.
[14] X. Liu, A. Nanni, P.F. Silva, Rehabilitation of compression steel members using FRP pipes filled with non-expansive and expansive light-weight concrete, Adv. Struct. Eng. 8 (2) (2005) 129–142.
[15] A. Shaat, A.Z. Fam, Slender steel columns strengthened using high-modulus CFRP plates for buckling control, J. Compos. Construct. 13 (1) (2009) 2–12.